ENGINE LUBRICATION

CONTENTS

GENERAL INFORMATION 2

SERVICE SPECIFICATIONS 3

SEALANT 3

LUBRICANTS 3

SPECIAL TOOLS 3

ON-VEHICLE SERVICE 4

- Engine Oil Check 4
- Engine Oil Replacement 4
- Oil Filter Replacement 5
- Oil Pressure Check 5

GENERAL INFORMATION

The lubrication method is a fully force-fed, full-flow filtration type. The oil pump is driven by the crankshaft via the timing belt.

ENGINE OILS

Health Warning

Prolonged and repeated contact with mineral oil will result in the removal of natural fats from the skin, leading to dryness, irritation and dermatitis. In addition, used engine oil contains potentially harmful contaminants which may cause skin cancer. Adequate means of skin protection and washing facilities must be provided.

Recommended Precautions

The most effective precaution is to adapt working practices which prevent, as far as practicable, the risk of skin contact with mineral oils, for example by using enclosed systems for handling used engine oil and by decreasing components, where practicable, before handling them.
Other precautions:

- Avoid prolonged and repeated contact with oils, particularly used engine oils.
- Wear protective clothing, including impervious gloves where practicable.
- Avoid contaminating clothes, particularly underpants, with oil.
- Do not put oily rags in pockets, the use of overalls without pockets will avoid this.
- Do not wear heavily soiled clothing and oil-impregnated foot-wear. Overalls must be cleaned regularly and kept separate from personal clothing.
- Where there is a risk of eye contact, eye protection should be worn, for example, chemical goggles or face shields; in addition an eye wash facility should be provided.
- Obtain First Aid treatment immediately for open cuts and wounds.
- Wash regularly with soap and water to ensure all oil is removed, especially before meals (skin cleansers and nail brushes will help). After cleaning, the application of preparations containing lanolin to replace the natural skin oils is advised.
- Do not use petrol, kerosine, diesel fuel, gas oil, thinners or solvents for cleaning skin.
- Use barrier creams, applying them before each work period, to help the removal of oil from the skin after work.
- If skin disorders develop, obtain medical advice without delay.

SERVICE SPECIFICATIONS

Item		Standard value
Oil pressure kPa	at idle	29 or more
	at 3,500 r/min	294 – 686

SEALANT

Item	Specified sealant
Oil pressure switch	3M ATD Part No. 8660 or equivalent

LUBRICANTS

Items		Specifications
Engine oil (API classification)		SG or higher
Engine oil quantity ℓ	Oil filter	0.3
	Total	3.8

SPECIAL TOOLS

Tool	Number	Name	Use
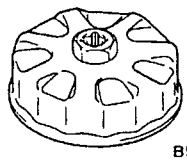 B991396	MB991396	Oil filter wrench	Removal and installation of engine oil filter (When using the oil filter of MD135737)
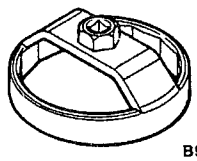 B991610	MB991610	Oil filter wrench	Removal and installation of engine oil filter (When using the oil filter of MD136466)
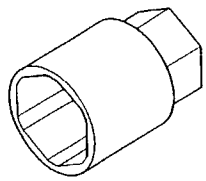	MD998054	Oil pressure switch wrench	Removal and installation of oil pressure switch

ON-VEHICLE SERVICE

ENGINE OIL CHECK

1. Pull out the level gauge slowly and check that the oil level is in the illustrated range.
2. Check that the oil is not excessively dirty, that there is no coolant or gasoline mixed in, and that it has sufficient viscosity.

ENGINE OIL REPLACEMENT

1. Start the engine and allow it to warm up until the temperature of the coolant reaches 80°C to 90°C.
2. Remove the engine oil filler cap.
3. Remove the drain plug to drain oil.

Caution
Use care as oil could be hot.

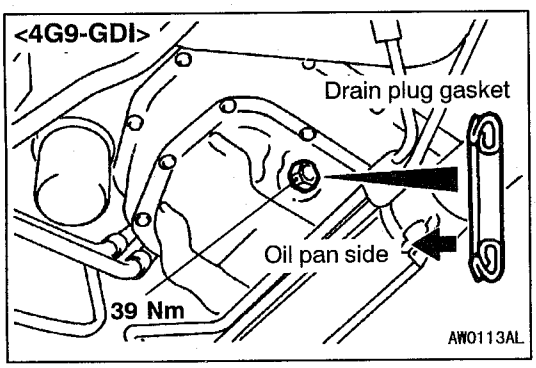

4. Install a new drain plug gasket so that it faces in the direction shown in the illustration, and then tighten the drain plug to the specified torque.

NOTE
Install the drain plug gasket so it faces in the direction shown in the illustration.

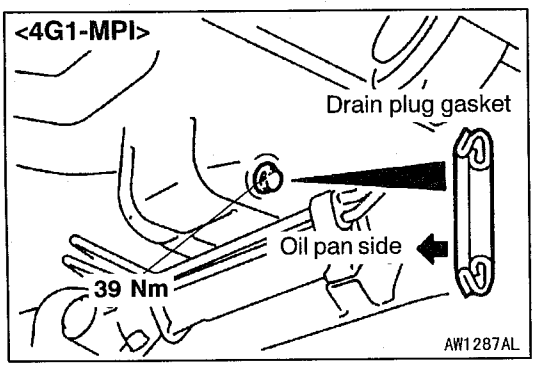

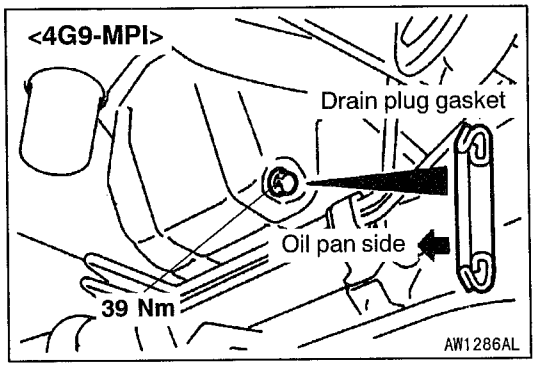

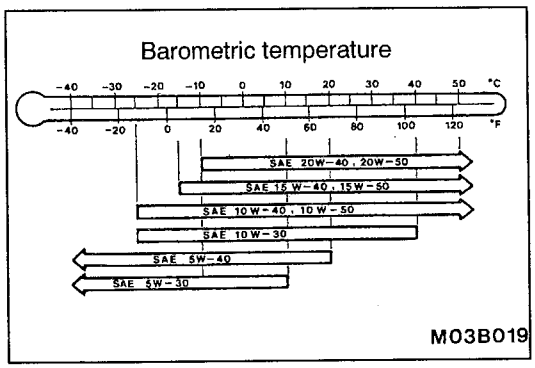

5. Refill with specified quantity of oil.

   Specified Engine Oil (API classification): SG or higher

   Total quantity (Includes volume inside oil filter and oil cooler): 3.8 ℓ
6. Install the engine oil filler cap.
7. Check oil level.

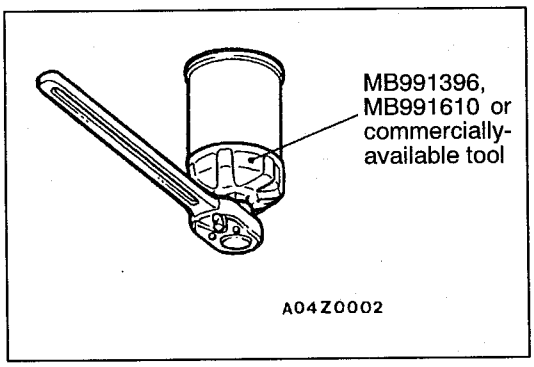

OIL FILTER REPLACEMENT

1. Start the engine and allow it to warm up until the temperature of the coolant reaches 80°C to 90°C.
2. Remove the engine oil filler cap.
3. Remove the drain plug to drain oil.

   Caution
   Use care as oil could be hot.
4. Remove the under cover.
5. Use the respective tool in the following table to remove the engine oil filter.
6. Clean the filter bracket side mounting surface.
7. Apply a small amount of engine oil to the O-ring of the new oil filter.
8. Once the O-ring of the oil filter is touching the flange, use the respective tool in the following table to tighten to the specified torque.
9. Install the drain plug and refill engine oil. (Refer to Engine Oil Replacement on P.12-4.)
10. Race the engine 2 – 3 times, and check to be sure that no engine oil leaks from installation section of the oil filter.

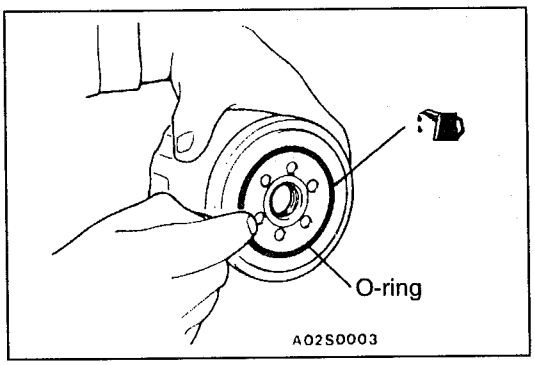

Number	Tool	Tightening torque
MD135737	MB991396 or equivalent tool	Approx. 1 turn (14 Nm)
MD136466	MB991610 or equivalent tool	Approx. 3/4 turn (17 Nm)
MD325714, MD332687	Commercially-available tool	Approx. 3/4 turn (17 Nm)
MD322508	Commercially-available tool	Approx. 3/4 turn (17 Nm)

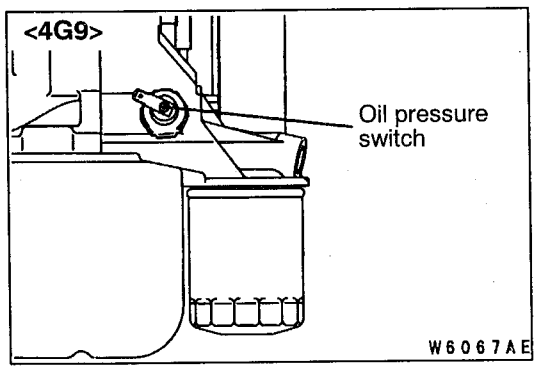

OIL PRESSURE CHECK

1. Check engine oil quantity.
2. Remove the oil pressure switch terminal.

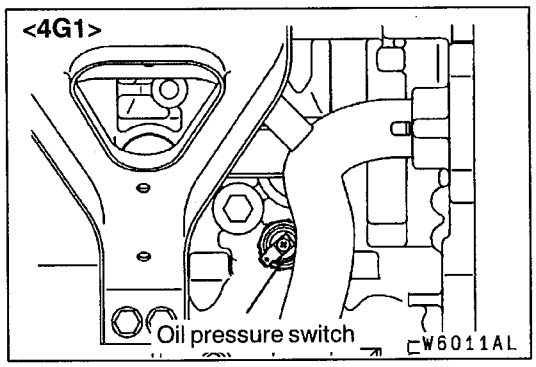

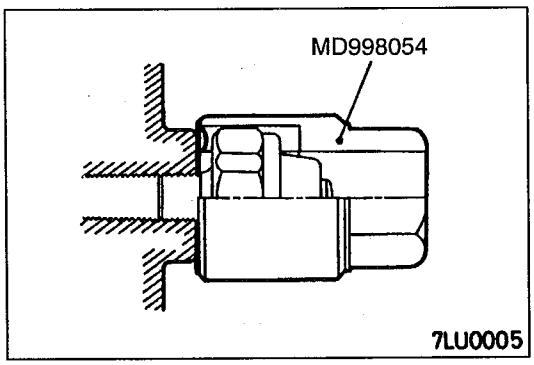

3. Use the special tool (oil pressure switch wrench) to remove the oil pressure switch.

   Caution
   Since sealant is applied to the thread of oil pressure switch, take care not to damage the oil pressure switch when removing it.
4. Install the oil pressure gauge.

   NOTE
   Use a adapter of PT 1/8 thread.
5. Run the engine to warm it.
6. After the engine has been warmed up, check that oil pressure is within the standard value.

   Standard value:

   At idle: 29 kPa or more

   At 3,500 r/min: 294 – 686 kPa
7. Remove the oil pressure gauge.

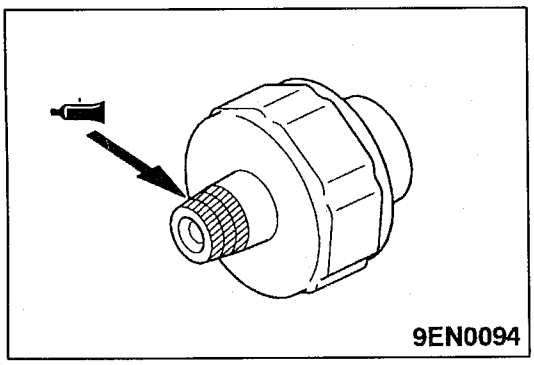

8. Apply the specified sealant to the thread of oil pressure switch.

   Specified sealant: 3M ATD Part No. 8660 or equivalent

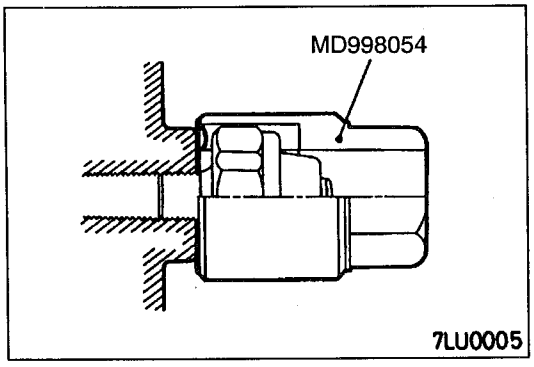

9. Use the special tool to tighten the oil pressure switch to the specified torque.

   Tightening torque: 19 Nm

   Caution
   Do not start the engine within one hour after the oil pressure switch has been installed.
10. Install the oil pressure switch terminal.